ESCAP | CSAM
Centre for Sustainable Agricultural Mechanization

PHilMech sustainable mechanization programs on climate-smart and crop residue management

Engr. Eleonor Fausto Santiago
Supervising Science Research Specialist
Laboratory Services Division

26 October 2026

Eleventh Regional Forum on Sustainable Agricultural Mechanization
Climate-smart Agricultural Mechanization for Sustainable Crop Residue Management and Resilient Agrifood Systems
26-28 October 2026 – Tianjin, China

PHilMech roadmap to modernization

R4D:

① **AMD** [Prototype dev't]

② **BPED** [PH technologies]

③ **SEPRD** [Economic feasibility]

④ **FPD** [Food safety]

⑤ **LSD** [Lab services]

ESETS:

⑥ **EDD** [Enterprise dev't]

⑦ **TMTD** [Trainings]

⑧ **ACD** [Communications]

OPERATIONS:

⑨ **RCEF**

⑩ **Coco Levy**

Smart farming
Green technologies
Gender-friendly machines
Y4M program
Agri-machinery design & prototyping
*Central Laboratory Research facility**
Online information systems :
>> Predictive modelling
>> Digitalization

ADMIN & LOGISTIC SUPPORT:

⑪ **OD** ⑫ **AD** ⑬ **FD** ⑭ **PMITD**

National Initiatives

- **Carbonized agri-waste materials:**

  >> Wastewater treatment system using microbes

- **Activated carbon from agri-waste materials:**

  >> Coconut processing wastewater treatment
  [Coco Levy program]





National Initiatives

Rice hull compactor:

>> Compression of loose rice hulls and other selected agri-wastes into compact, high-density blocks for easy handling, storage, and transport

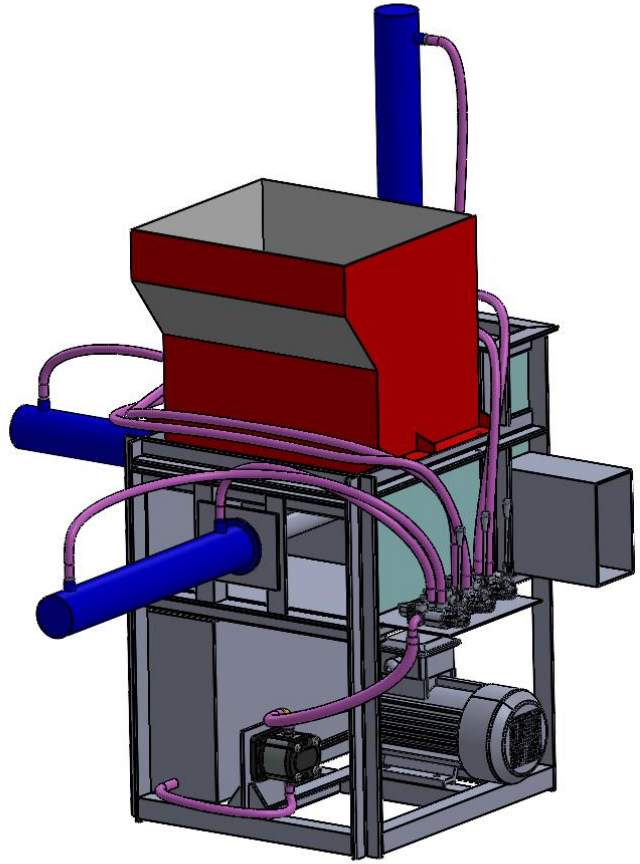

National Initiatives

Sugarcane crop waste pelletizer:

>> Converts sugarcane tops, mixed with feed supplement and molasses, into pelleted animal feeds



National Initiatives

- **Rice straw mushroom substrate bagger*:**

>> Automated mixing, compaction, and bagging of mushroom substrate using rice straw

- **Electric mushroom fruiting bag sterilizer*:**

>> automated electric fruiting bag sterilizer for efficient, large-scale, and consistent sterilization of mushroom fruiting bags

** Submitted for utility model application*

Other Relevant Technologies

- **Localization of machines and improvement of technologies:**
  - Cacao pods briquetting system



- **Technologies on carbon sequestration, carbon credits, climate change, greenhouse gas emissions:**
  - **Patents:** Handheld copra moisture meter, Computer-based mango sorter, Soil digger, Bioactive compound for mango anthracnose
  - **Industrial designs:** Copra moisture meter, Improved coffee depulper
  - **Utility model:** Cacao pectin extraction process
  - **Copyright:** Coffee eLearning modules

THANK YOU

Philippine Center for Postharvest Development and Mechanization
CLSU Compound, Science City of Muñoz, Nueva Ecija 3120 Philippines

Office of the Director IV

Tel.nos. +63 917 8004526 local 101

Email: od@philmech.gov.ph / lsd@philmech.gov.ph

Website: www.philmech.gov.ph

CSAM
Centre for Sustainable Agricultural Mechanization